ReSound GN

User guide

ReSound Custom Charger

GN Making Life Sound Better

resound.com

Table of Contents

Introduction 3
Intended purpose 4
Symbols 5
Getting to know your charger 7
Getting started 9
Cleaning and maintenance 14
General warnings 17
Warnings to hearing care professionals 19
Technical specifications 20
Troubleshooting 21
Warranties and repairs 23
Temperature test, transport and storage information 24
Location of serial numbers 26
Statement 28
Acknowledgements 31

Introduction

Thank you for choosing our products and congratulations on the purchase of your new rechargeable hearing aids and charger. Our innovative recharging technology gives you expanded freedom and flexibility.

To benefit fully from your new charger, please read this manual carefully. With proper care, maintenance and usage, your hearing aids and charger will give you years of improved hearing and communication.

This user guide contains instructions on how to use your charger. For information on using your hearing aids, consult the hearing aid user guide.

Intended purpose

The hearing aid charger is intended to charge rechargeable hearing aids. The charger is intended to be used only with ReSound rechargeable hearing aids.

The hearing aid charger is intended to be used by lay persons.

No known contra-indications.

Symbols

WARNING: Points out a situation that could lead to serious injuries.

CAUTION: Indicates a situation that could lead to minor and moderate injuries.

NOTE: Advice and tips on how to handle your charger.

Follow instructions for use.

Manufacturer.

Temperature limits.

Please ask your local hearing care professional concerning disposal of your charger.

NOTE: Country-specific regulations may apply.

Complies with ACMA requirements.

Complies with IMDA Standards DA105282

Complies with IMDA requirements.

MD Medical device.

Getting to know your charger

1. Hearing aid
2. Hearing aid in charging location
3. The insert tray
4. Green LED charging indicators

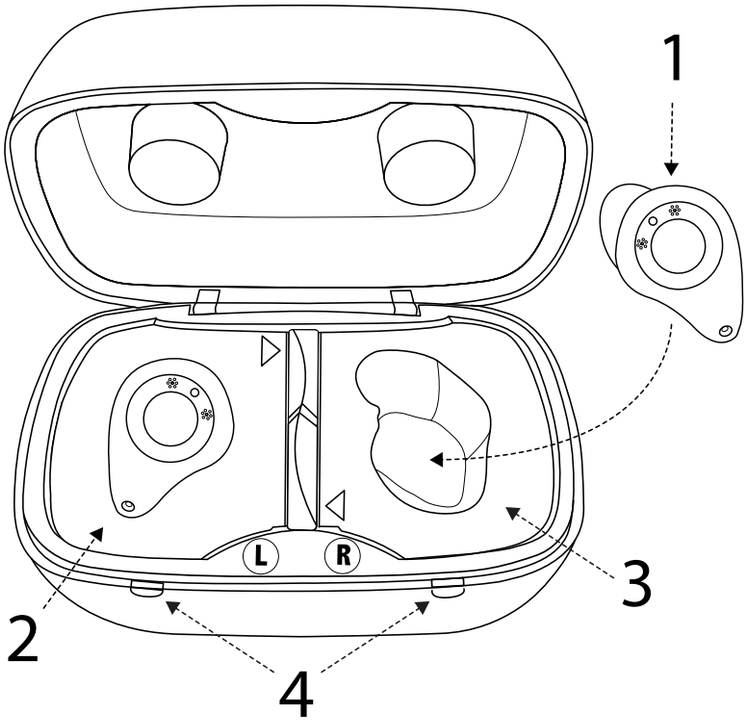

Back view of charger

1. Green LED power indicator
2. USB-C cable socket

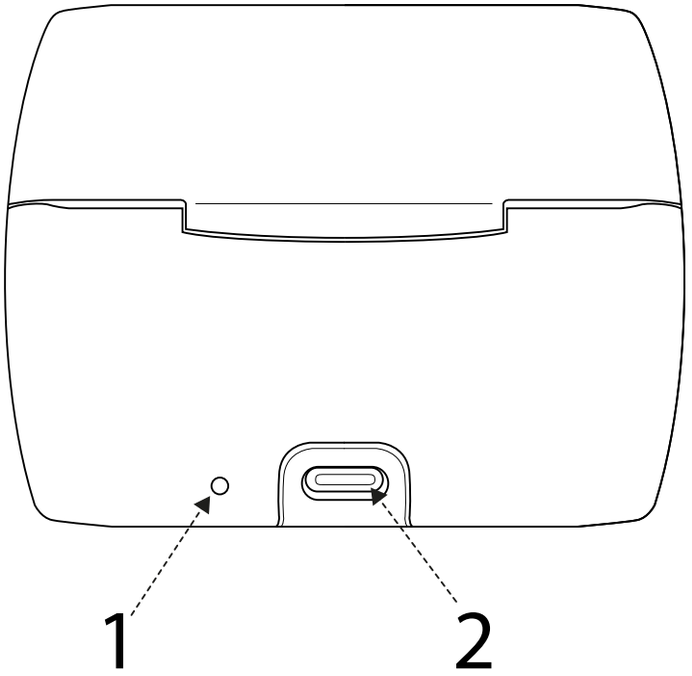

Getting started

Placing your hearing aids in the charger

Fully charge your hearing aids before using them.

CAUTION:

- Before inserting your hearing aids into the charger, ensure that they are dry.
- For safety reasons, use only the charger supplied by ReSound.

1. Plug the supplied power adapter into a power outlet and connect the charging cable to the hearing aid charger.

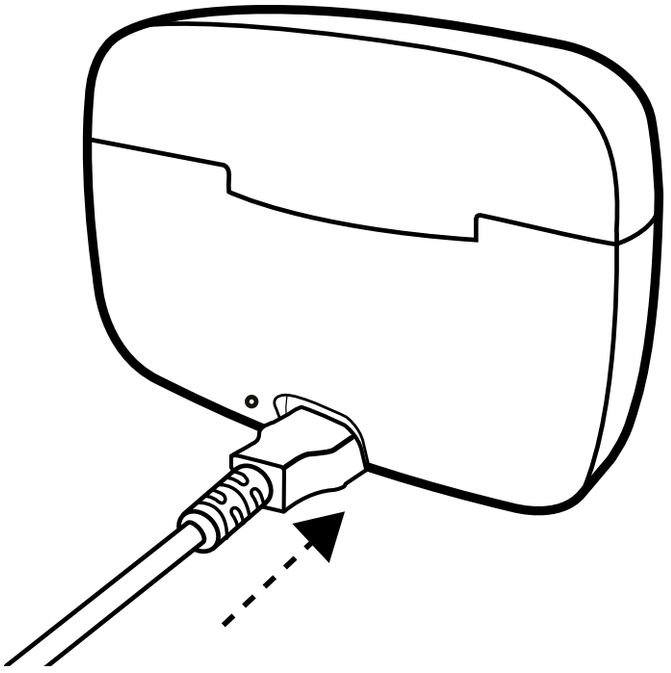

2. Place the left hearing aid into the charging bay marked "L" (left). Place the right hearing aid into the charging bay marked "R" (right). The LED will light up when the lid is closed, indicating that charging has been initiated.

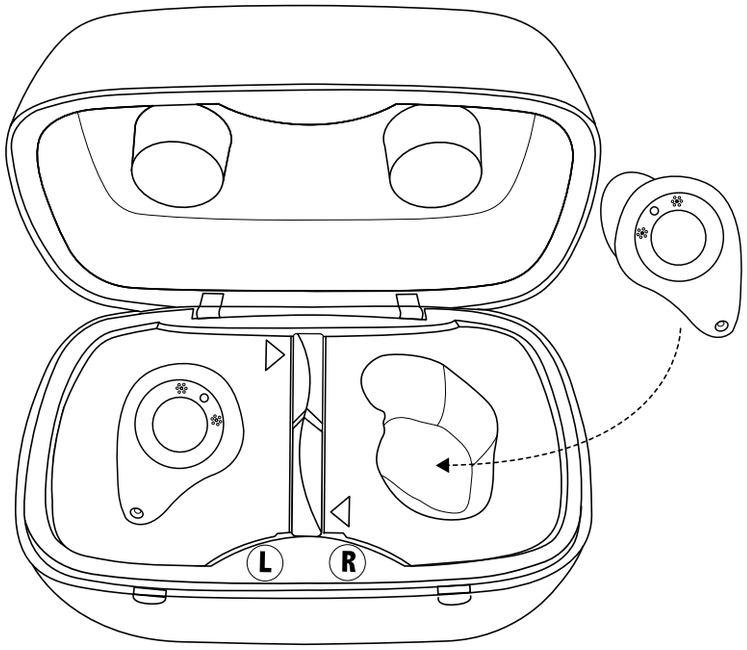

NOTE:

- Make sure that your hearing aids are fully inserted into the charger. Charging will begin only after the lid is closed.
- First time the hearing aids are placed in the charger, they may whistle briefly when the charger is turned on. This is normal.

WARNING:

- Keep your charger and rechargeable hearing aids away from pets, children and people with cognitive, intellectual or mental health challenges.
- Avoid charging your product in extremely high or low temperatures.
- Do not use the charger outdoors or in damp areas.
- For safety reasons, use only the charger provided with your hearing aid.

Charging your hearing aids

Charging only occurs when the hearing aids are correctly placed in the charger, charger lid is closed, and the charger is correctly connected to a power outlet. During charging, the charger indication LED will darken in order not to disrupt sleep. You may charge either or both hearing aids as charging is independent of each other.

NOTE: Ensure the hearing aids are fully inserted into the charger.

Charger light patterns		
Location	LED blink pattern	LED indicates
Back	Green (constant).	Powered.
Front	Green (constant).	Hearing aid is fully charged. Each hearing aid has its own LED indicator.
	Green, slow pulse (2 seconds On, 2 seconds Off).	Charging. May apply to either or both sides.

Charger light patterns		
	Slow pulse on a single green LED and constant green on other LED.	One hearing aid being charged and one hearing aid fully charged.
	Fast blinking (1/2 second On, 1/2 second Off).	Error - See "Troubleshooting", page 21

Cleaning and maintenance

Care and maintenance

NOTE: To have the best user experience, and to prolong the life of your charger, follow these steps:

- Keep your hearing aid charger dry and clean.
- To remove grease and moisture, wipe the hearing aid charger with a dry, soft cloth after use.

Cleaning your hearing aid charger

1. Clean the outside of the charger using a dry, clean cloth.
2. Cleaning the inserts while in the charger: use a dry, clean cotton bud.
3. You may remove the insert for more thorough cleaning with warm water - See "Removing charger inserts for cleaning", page 15.
4. If using water to clean the insert: ensure the insert is completely dry before placing into charger.

WARNING: Do not use liquid to clean your hearing aid charger.

Removing charger inserts for cleaning

1. Push the rear clip to the right to release the left insert. The left insert will pop up.
2. Remove the left insert for cleaning.

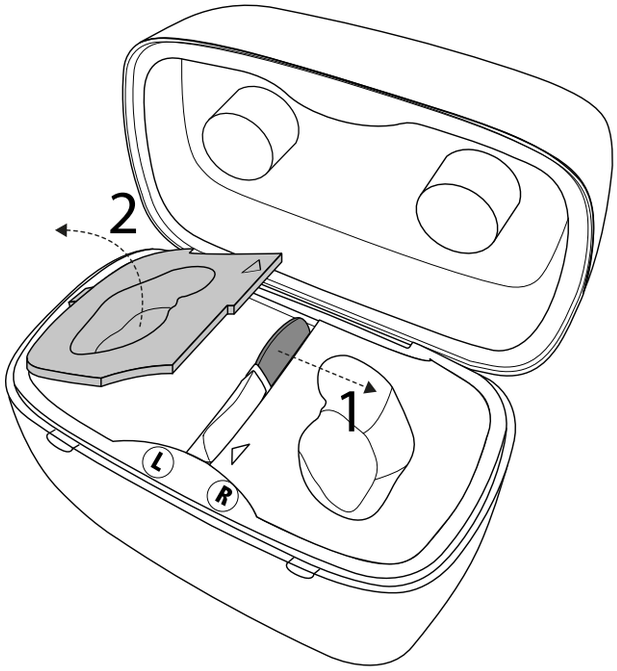

3. Push the front clip to the left to release the right insert. The right insert will pop up.
4. Remove the right insert for cleaning.
5. Inserts should only be cleaned with warm water on a clean cloth.

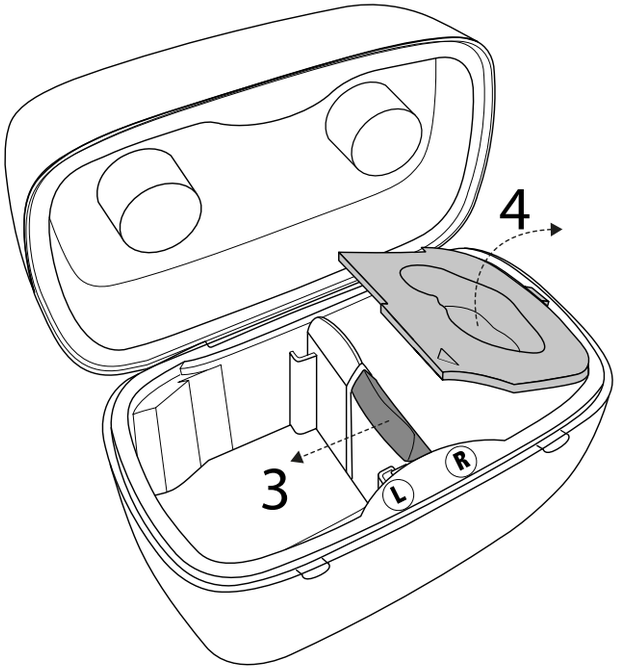

Replacing the inserts

The inserts are uniquely shaped to ensure a correct fit in the charger.

1. Place the insert tab on the left insert into the recess in the left side of the charger.
2. Gently press the right side down until it clicks into place.
3. Repeat the process for the other insert.

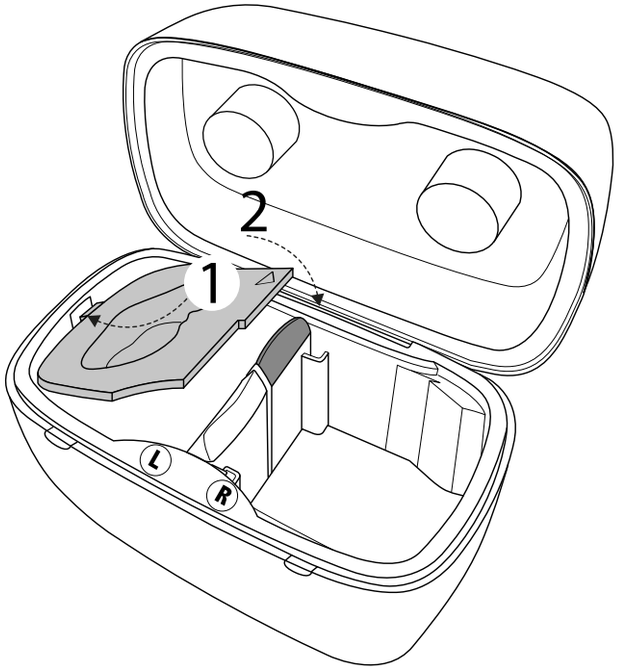

General warnings

⚠ **WARNING:**

- This charger contains small parts. Swallowing small parts can result in choking. If small parts are swallowed, seek immediate medical attention.
- Keep your charger and rechargeable hearing aids away from pets, children and people with cognitive, intellectual or mental health challenges.
- Keep your hearing aid charger away from excessive heat like ovens or microwave ovens and direct sunlight. The heat may deform the casing, damage the electronics and deteriorate the surfaces.
- Never use your hearing aid charger in places with explosive gases such as mines, oil fields or the like unless these areas are certified for hearing aid use. Using your hearing aid charger in places that are not certified can be dangerous.
- When you disconnect the power cord or any enhancement, grasp and pull the plug, not the cord.
- No modification of this device is allowed.

- Do not attempt to disassemble the charger as it may expose you to dangerous electric shock and cause the warranty to terminate.
- Never use a damaged charger. A damaged or incorrectly reassembled charger can cause electric shock or fire when the product is subsequently used.
- Exposing the charger to temperatures beyond the supported range may cause permanent damage. Do not expose to direct sunlight and do not place in a hot car.
- When using wireless functions, your charger uses low-powered digitally coded transmissions to communicate with other wireless devices. It is possible, but not likely, that other electronic devices will be affected. If this happens, move the charger away from the affected electronic device.

Warnings to hearing care professionals

⚠ **WARNING:**

- External devices connected to the electrical input must be safe according to the requirements of IEC 60601-1, IEC 60065 or IEC 62368-1 or equivalent, as appropriate.

Technical specifications

Custom Charger	
Dimensions	82 mm x 48 mm x 58 mm/3.3" x 1.9" x 2.3"
Weight	108 g/3.8 oz
Charging time for hearing aid	10 °C – 30 °C (50 °F – 86 °F): 5 hours maximum, depending on initial state of the batteries
Wireless frequency between hearing aid and charger	2.4 GHz and 135.6 kHz
Transmitted power output	For 2.4 GHz: -11.86 dBm.

Troubleshooting

Symptom	Possible cause	Possible remedy
Hearing aid is not charging	Is the hearing aid sitting correctly in the charger?	Ensure the inserts are fitted correctly. Place the hearing aid in the charger.
	Is the charger plugged into a working power outlet?	Check for a constant green LED light next to the power cable on the back of the charger.

Charger FAQ	
How do I prepare my new charger for use?	Ensure the inserts are in place. Then just plug in the charger as described in the section Getting Started.
Must I remove the hearing aids from the charger once they are fully charged?	No. For example, you can leave your hearing aids in the charger overnight.
How can I see the battery level?	You can see the battery level on the smartphone app.

Charger FAQ	
Must I use up all the battery power before charging again?	No. Regular charging such as charging overnight is considered normal use. The batteries in the hearing aids can be recharged at any level of charge.
Must I charge the hearing aids fully before use?	It is recommended to fully charge the batteries before first use. A partial charge is fine and will not harm the hearing aids or the battery, but a full charge will provide the longest usage without needing to recharge.
Can I charge the hearing aids at low temperatures?	If the temperature is below +5 °C (+41 °F), it will not charge.
Can I charge the hearing aids at high temperatures?	Charging should take place between +5 °C (+41 °F) and +30 °C (86 °F).

Warranties and repairs

ReSound provides a warranty on hearing aid chargers in the event of defects in workmanship or materials, as described in the applicable warranty documentation. In its service policy, ReSound pledges to secure functionality at least equivalent to the original hearing aid charger. As a signatory to the United Nations Global Compact initiative, ReSound is committed to doing this in line with environment-friendly best practices. Hearing aid chargers, therefore, at ReSound discretion, may be replaced by new products or products manufactured from new or serviceable used parts, or repaired using new or refurbished replacement parts. The warranty period of hearing aid chargers is designated on your warranty card, which is provided by your hearing care professional.

For hearing aid chargers that require service, please contact your hearing care professional for assistance. ReSound hearing aid chargers that malfunction must be repaired by a qualified technician. Do not attempt to open the casing of the hearing aid charger as this will invalidate the warranty.

Expected service life time

The expected service life time for the charger is a minimum of 5 years.

Temperature test, transport and storage information

⚠ **CAUTION:** If your hearing aid or charger has been exposed to very high or low temperatures, follow the guidelines in this section to ensure proper function and safe surface temperatures.

⚠ **WARNING:** Charging your hearing aids at ambient temperatures over +30 °C (86 °F) may make your hearing aids dangerously hot and lead to extended charging times.

⚠ **CAUTION:** During charging, your hearing aids may reach temperatures up to 43 °C (109 °F).

During normal operation the temperature should not exceed the limit values of +5 °C (+41 °F) to +30 °C (86 °F), at a relative humidity range of 15% to 90%, non-condensing, but not requiring a water vapour partial pressure greater than 50 hPa. An atmospheric pressure between 700 hPa and 1060 hPa is appropriate.

During transport or storage, the temperature should not exceed the limit values of:

- -25 °C (-13°F) to +5 °C (41°F)
- +5 °C (41 °F) to +35 °C (95 °F) at a relative humidity up to 90 %, non-condensing
- >+35 °C (95 °F) to +60 °C (140 °F) at a water vapour pressure up to 50 hPa.

Warm-up time (from -25 °C (-13 °F) when placed at 20 °C (68 °F)):
15 minutes.
Cool-down time (from +60 °C (140 °F) when placed at 20 °C (68 °F)):
20 minutes.

Location of serial numbers

1. Location of serial number on charger.
   (bottom view of charger)

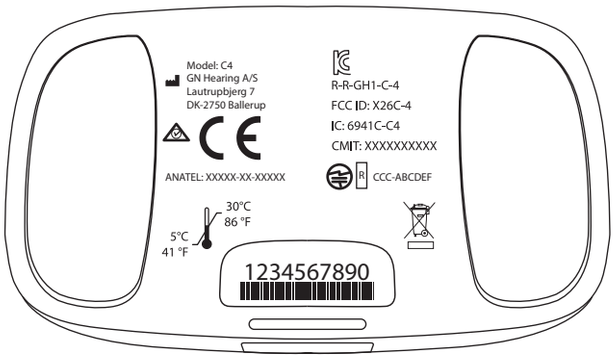

2. Location of serial number on insert.
   (bottom view of insert)

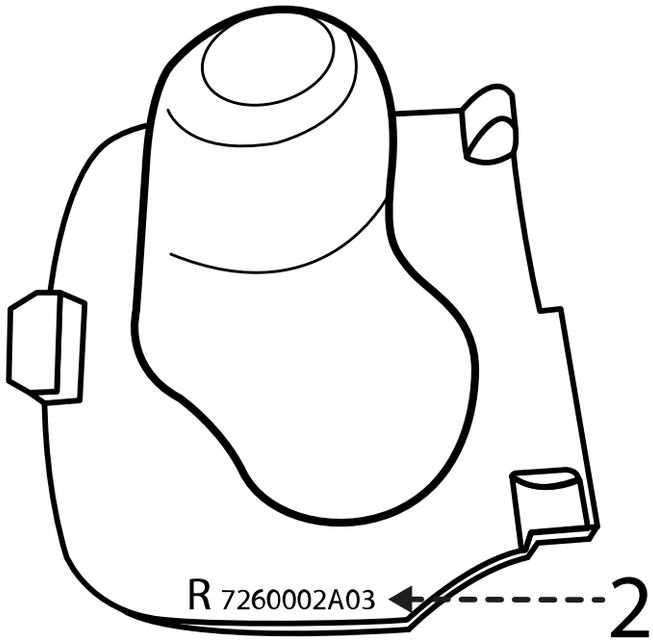

Matching your inserts to your hearing aid

Your hearing aids come with a set of inserts for the charger that are specially made to fit your hearing aids. You can match each insert to the correct hearing aid.

The serial number for the hearing aid is printed on the body of the hearing aid.

The serial number for the insert is printed on the underside of the insert and follows the larger printed 'L' (for Left) or 'R' (for Right).

You may need a magnifying glass to read the numbers.

The serial number on the inserts have the format: XX12345XXX.

The first two numbers are the country code. The next five numbers are the last five numbers of the serial number on your hearing aid. The final three markings indicate the year and week of production.

Statement

This device complies with part 15 of the FCC rules and ICES-003 of the ISED rules. Operation is subject to the following two conditions:

1. This device may not cause harmful interference.
2. This device must accept any interference received, including interference that may cause undesired operation.

NOTE: This equipment has been tested and found to comply with the limits for a Class B digital device, pursuant to part 15 of the FCC rules and ISED rules. These limits are designed to provide reasonable protection against harmful interference in a residential installation. This equipment generates, uses and can radiate radio frequency energy and, if not installed and used in accordance with the instructions, may cause harmful interference to radio communications.

However, there is no guarantee that interference will not occur in a particular installation. If this equipment does cause harmful interference to radio or television reception, which can be determined by turning the equipment off and on, the user is

encouraged to try to correct the interference by one or more of the following measures:

- Reorient or relocate the receiving antenna
- Increase the separation between the equipment and the receiver
- Connect the equipment to an outlet or a circuit different from the one to which the receiver is connected
- Consult the dealer or an experienced radio/TV technician for help.

Changes or modifications can void the user's authority to operate the equipment.

The products are in compliance with the following regulatory requirements:

- In EU: The device conforms to the General Safety and Performance Requirements according to Annex I of the EU Medical Device Regulation 2017/745 (MDR).
- Hereby, GN Hearing A/S declares that the radio equipment type C-4 is in compliance with Radio Equipment Directive 2014/53/EU (RED).
- The full text of the EU declaration of conformity is available at the following internet address: www.declarations.resound.com.

- In US: FCC CFR 47 Part 15, subpart C.
- For other identified applicable international regulatory requirements in countries outside the EU and US, please refer to local country requirements for these areas.
- In Canada: this device is certified under the rules of ISED.

Japanese Radio Law and Japanese Telecommunications Business Law Compliance. This device is granted pursuant to the Japanese Radio Law (電波法) and the Japanese telecommunications Business Law (電気通信事業法).

Charger type designations for the model included in this user guide are:

FCC ID: X26C-4, IC no.: 6941C-C4.

Acknowledgements

Portions of this software are written by Kenneth MacKay (micro-ecc) and licensed under the following terms and conditions:

Copyright ® 2014, Kenneth MacKay. All rights reserved.

Redistribution and use in source and binary forms, with or without modification, are permitted provided that the following conditions are met:

- Redistributions of source code must retain the above copyright notice, this list of conditions and the following disclaimer.
- Redistributions in binary form must reproduce the above copyright notice, this list of conditions and the following disclaimer in the documentation and/or other materials provided with the distribution.

THIS SOFTWARE IS PROVIDED BY THE COPYRIGHT HOLDERS AND CONTRIBUTORS “AS IS” AND ANY EXPRESS OR IMPLIED WARRANTIES, INCLUDING, BUT NOT LIMITED TO, THE IMPLIED WARRANTIES OF MERCHANTABILITY AND FITNESS FOR A PARTICULAR PURPOSE ARE DISCLAIMED. IN NO EVENT SHALL THE COPYRIGHT HOLDER OR CONTRIBUTORS BE LIABLE FOR ANY DIRECT, INDIRECT, INCIDENTAL, SPECIAL, EXEMPLARY, OR CONSEQUENTIAL DAMAGES (INCLUDING, BUT NOT LIMITED TO,

PROCUREMENT OF SUBSTITUTE GOODS OR SERVICES; LOSS OF USE, DATA, OR PROFITS; OR BUSINESS INTERRUPTION) HOWEVER CAUSED AND ON ANY THEORY OF LIABILITY, WHETHER IN CONTRACT, STRICT LIABILITY, OR TORT (INCLUDING NEGLIGENCE OR OTHERWISE) ARISING IN ANY WAY OUT OF THE USE OF THIS SOFTWARE, EVEN IF ADVISED OF THE POSSIBILITY OF SUCH DAMAGE.

© 2022 GN Hearing A/S. All rights reserved. ReSound is a trademark of GN Hearing A/S.

Notes

Notes

Notes

Manufacturer according to
EU Medical Device
Regulation 2017/745:

GN Hearing A/S
Lautrupbjerg 7
DK-2750 Ballerup
Denmark
resound.com
CVR no. 55082715

Local contacts:

United Kingdom
GN Hearing UK Ltd
Unit 13 Talisman Business Centre
Bicester OX26 6HR
United Kingdom
Tel.: +44 1869 352 800
resound.com

Australia
GN Hearing Australia Pty Ltd
Gate C, 19-25 Khartoum Rd
Macquarie Technology Park
Macquarie Park NSW 2113
Australia
Tel.: (free) 1800 658 955
resound.com

New Zealand
GN Hearing New Zealand Limited
Ground Floor, North Entrance
4 Fred Thomas Drive
Takapuna, Auckland, 0622
Tel.: (free) 0800 900 126
resound.com

Singapore
GN Hearing Pte. Ltd
456 Alexandra Road
#22-01
Singapore 119962
Tel: +65 6320 9388
resound.com

Any serious incident that has occurred in relation to the device should be reported to the Legal manufacturer GN Hearing A/S and the competent authority of the EU Member State in which the user and/or patient is established.

401639000GB- 22.05 - Rev. D (Date of issuance: 2022.05.01)